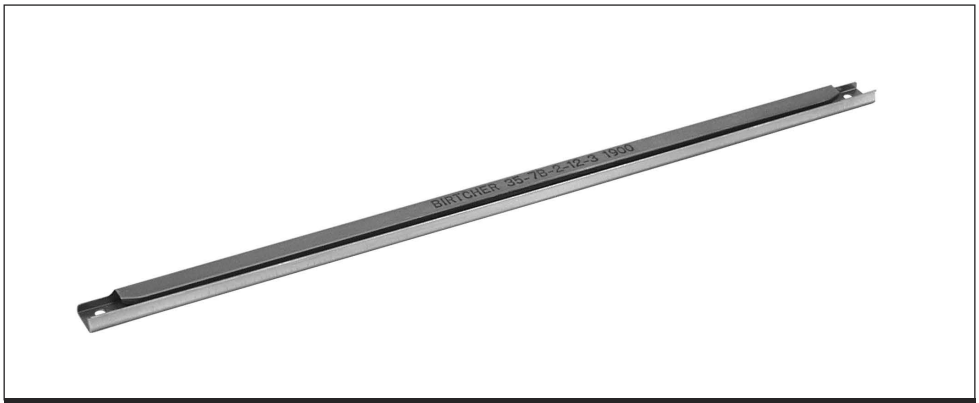

Series 35-7 PCB Tainer

WEIGHT

.17g/cm (.015 oz/in)

MATERIALS AND FINISH

HOUSING

Material:
.005-in. (.13-mm) thick Beryllium Copper per ASTM B-194 or Stainless Steel per MIL-S-5059

Finish:
See finish table on opposite page

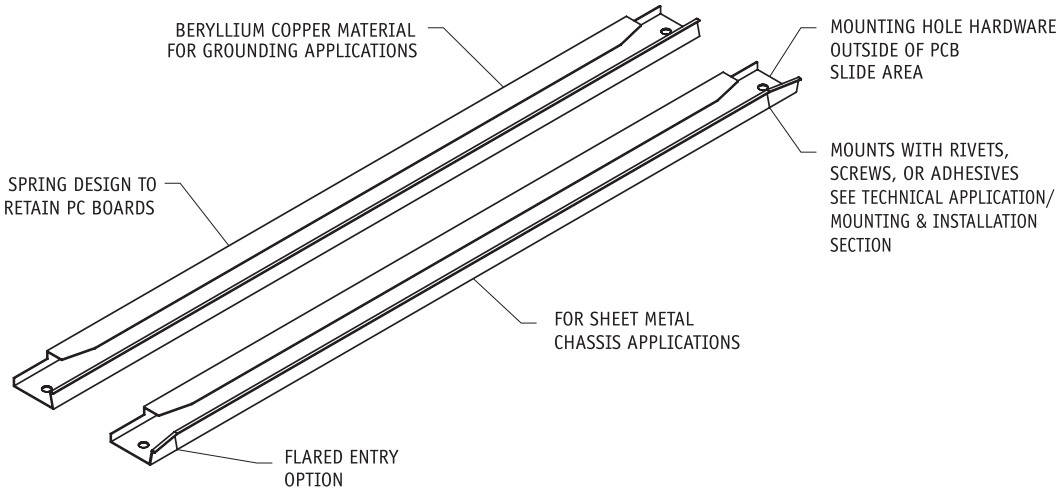

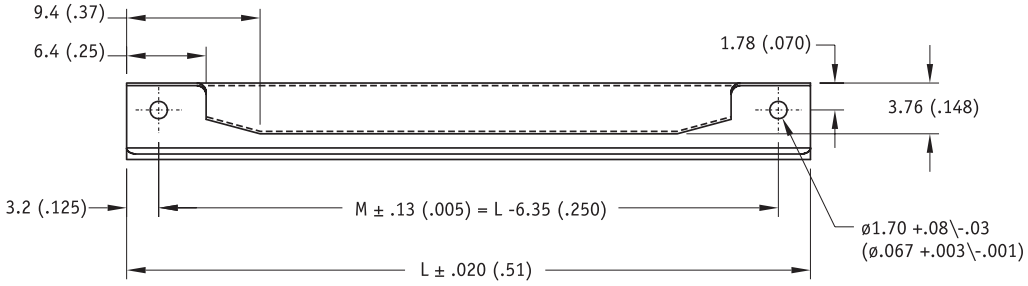

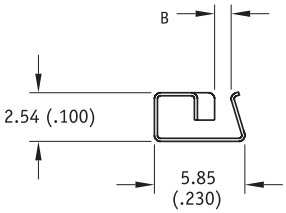

RELAXED

Units: mm(in)
unless specified otherwise,
.xx = ± .25, .x = ± .5
(.xxx = ±.010, .xx = ± .02)

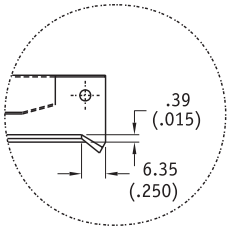

FLARED ENTRY OPTION

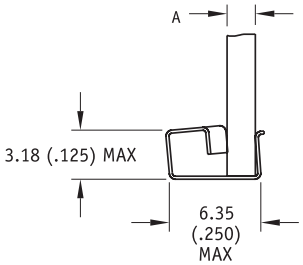

WITH BOARD INSERTED

MATERIALS TABLE

CODE LETTER	MATERIAL
B	BERYLLIUM COPPER, 1/4H PER ASTM-B-194
BH	BERYLLIUM COPPER, 1/4HT PER QQ-C-533, HEAT TREATED
CR	STAINLESS STEEL, TYPE 301 COND 1/4 H PER AMS 5517

BOARD THICKNESS TABLE

DASH #	BOARD THICKNESS A	RELAXED +.00/-.38 (+.000/-.015) B
-1	0.79 (.031)	0.64 (.025)
-2	1.60 (.063)	1.40 (.055)
-3	2.36 (.093)	2.16 (.085)

FINISH TABLE

DASH #	
[blank]	SILVER PLATE PER QQ-S-365, TYPE III, GRADE A
-1	NONE
-2	EBANOL PER MIL-F-495 FOR BERYLLIUM COPPER PER MIL-C-13924 FOR STEEL
-3	CADMIUM PER QQ-P-416, TYPE 2, CLASS 2
-4	COPPER PLATE PER MIL-C-14550, CLASS 2
-5	GOLD PLATE PER MIL-G-45204, TYPE 1, GLASS 1
-6	NICKEL PLATE PER QQ-N-290, CLASS 1, GRADE G, BRIGHT
-7	ZINC PLATE CLEAR CHROMATE, PER ASTM-B-633, Fe/Zn 8
-8	ZINC PLATE YELLOW CHROMATE, PER ASTM-B-633, Fe/Zn 8

Part Number Code

Series 35-7 PCB-TAINER **35 C F - 7 B - 2 - 10 - 5**

Center Mounting Hole:
Center Mounting Hole: _____ **C**
None:_____ **[Blank]**

Flared Entry
Flared Entry: _____ **F**
None:_____ **[Blank]**

Material
Beryllium Copper_____ **B**
or select from Materials Table

Board Thickness
1.59 (.063) PCB Thickness_____ **2**
or select from Board Thickness Table

Length
Length in 12.7 (.50) increments _____ 2 [25.4 (1.00)]
_____ to 12 [152.4 (6.00)]

Finish
Gold Plate _____ **5**
or select from Finish Table

No dash number required for CR material. Stainless steel parts are passivated only.

Part Number Code example: 35-7B-3-12-6
35 Series PCB-TAINER, Beryllium Copper, 2.38-mm (.093-in.) thick board, 152.4-mm (6.00-in.) long, Nickel Plate finish.