THIS DRAWING IS UNPUBLISHED. RELEASED FOR PUBLICATION -,- .
© COPYRIGHT - By - ALL RIGHTS RESERVED.

LOC	DIST
FT	0

REVISIONS

P	LTR	DESCRIPTION	DATE	DWN	APVD
	P	REVISED PER ECO-11-004917	11MAR11	RK	HMR

MATERIAL:
HOUSING: POLYAMIDE 6/6, GRAY, HANDLE BLACK.
INSERTS: BRASS, TIN PLATED.
CONTACTS FOR FUSES: STAINLESS SPRING STEEL.
SCREWS: STEEL, ZINC PLATED, NON-HEXAVALENT CHROMATE (CHROME III).

VOLTAGE RATING:
FUSE HOLDERS: 250V
TERMINAL BLOCKS: 400V

CURRENT RATING:
FUSE HOLDERS: 16A
TERMINAL BLOCKS: 34A

WIRE RANGE: 10-24 AWG (WIRE PROTECTOR)
WIRE RANGE: 8-22 AWG (TUNNEL CONNECTIION)

1 LOCATING FEATURE IS NOT APPLICABLE TO 1 POSITION PART.

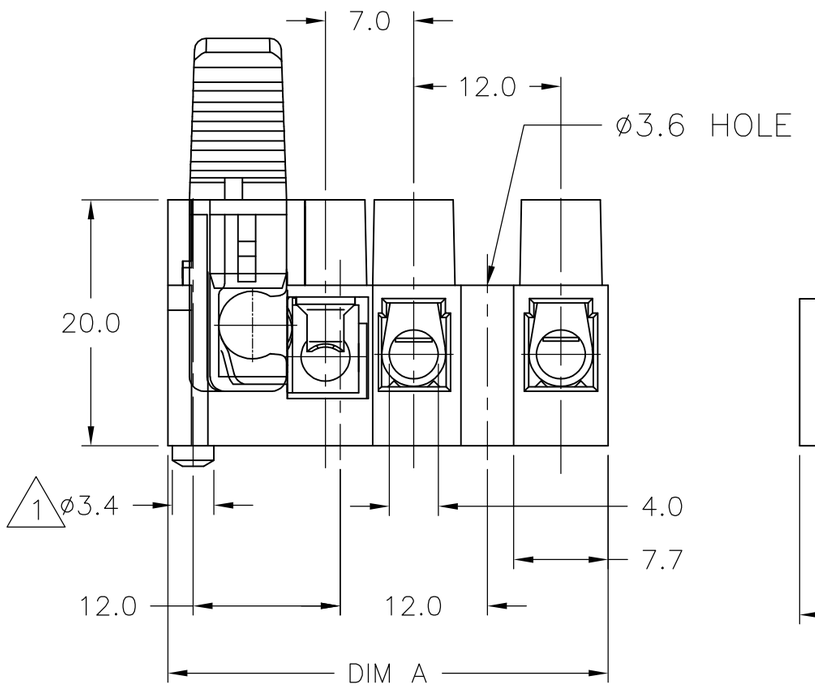

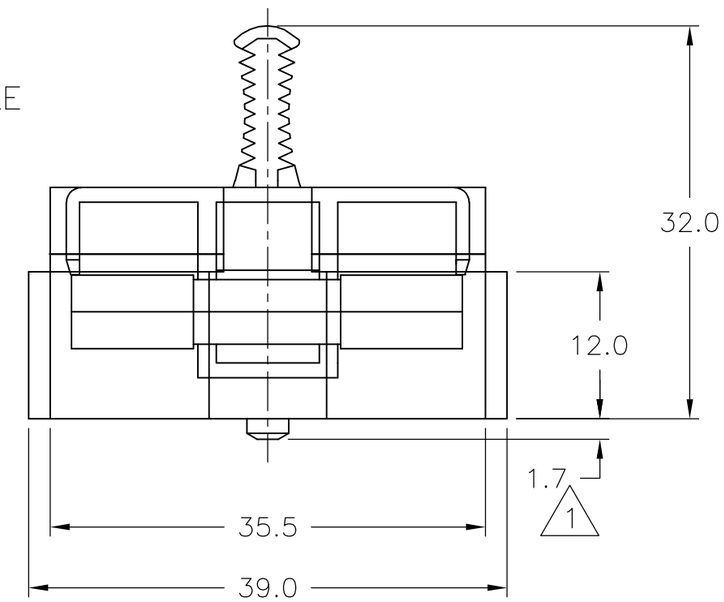

36.0	1003SI/3EDS	1776309-4
DIM A	CATALOG NO.	PART NUMBER
WIRE PROTECTOR GROUNDED		

36.0	1003SI/3E	1776309-3
DIM A	CATALOG NO.	PART NUMBER
TUNNEL CONNECTION GROUNDED		

24.0	1003SI/2DS	1776309-2
18.7	1003SI/1DS	1776309-1
DIM A	CATALOG NO.	PART NUMBER
WIRE PROTECTOR		

	60.0	1003SI/5	1-1776309-5
	48.0	1003SI/4	1-1776309-4
	36.0	1003SI/3	1-1776309-3
	24.0	1003SI/2	1-1776309-2
1	18.7	1003SI/1	1-1776309-1
	DIM A	CATALOG NO.	PART NUMBER
	TUNNEL CONNECTION		

THIS DRAWING IS A CONTROLLED DOCUMENT.

DIMENSIONS: mm

TOLERANCES UNLESS OTHERWISE SPECIFIED:
0 PLC ± -
1 PLC ± .3
2 PLC ± .25
3 PLC ± -
4 PLC ± -
ANGLES ± -

MATERIAL -
FINISH -

DWN S SCHLEGEL 3/22/05
CHK S YODER 3/22/05
APVD S YODER 3/22/05
PRODUCT SPEC —
APPLICATION SPEC —
WEIGHT —

TE Connectivity

NAME
FUSED TERMINAL BLOCK
1003Si

SIZE	CAGE CODE	DRAWING NO	RESTRICTED TO
A3	00779	C-1776309	—

CUSTOMER DRAWING

SCALE	SHEET	REV
NTS	1 OF 1	P