D1RFRD006

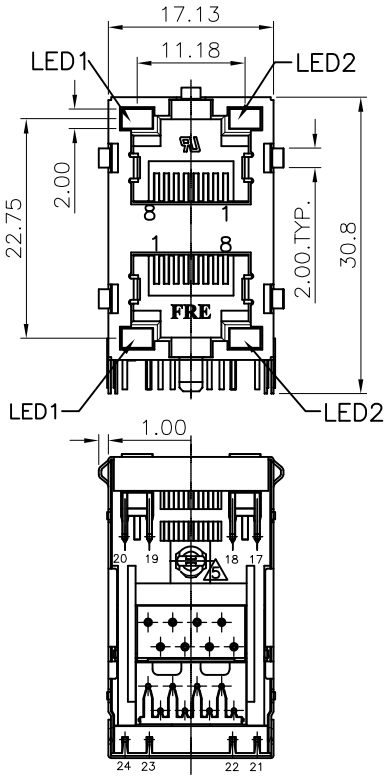

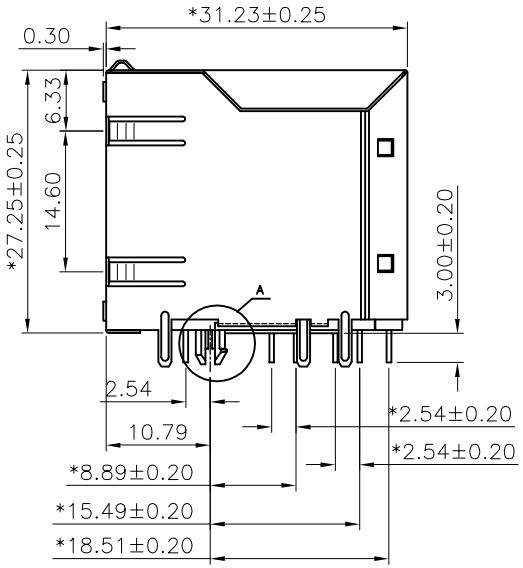

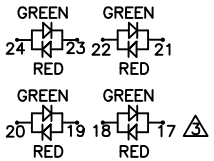

FOR P/N:E5J88-D4LXFX

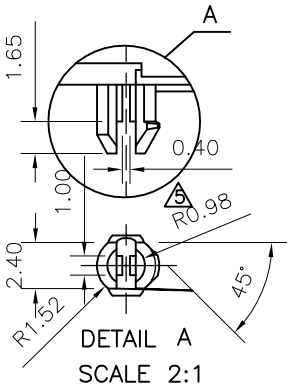

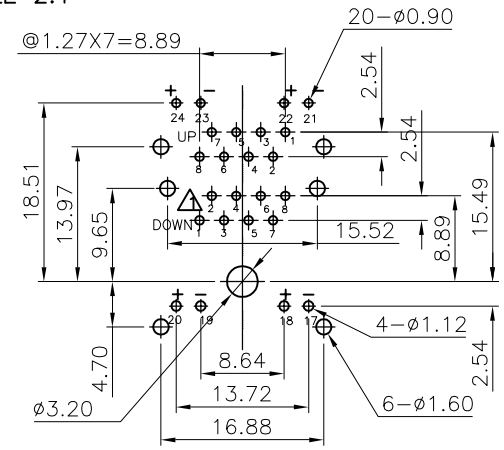

PC Board Layout
Component Side Shown

NOTES:

ELECTRICAL:
1. VOLTAGE RATING : 125 VAC RMS.
2. CURRENT RATING : 1.5 AMP.
3. CONTACT RESISTANCE : 50 MILLIOHMS MAX.
4. INSULATION RESISTANCE: 1000 MEGOHMS MIN @ 500 VDC.
5. DIELECTRIC STRENGTH : 1000 VAC RMS 60Hz, 1MIN.

MECHANICAL:
1. HOUSING MATERIAL : GLASS FILLED POLYESTER UL94V-0.
2. CONTACT MATERIAL : PHOSPHOR BRONZE ø0.46mm.
3. PLATING : 1: CONTACT AREA- SELECTIVE GOLD PLATING.
   2: TAILS- 150u" TIN-LEAD MIN OVER 50u" NICKEL.
4. OPERATING LIFE : 750 CYCLES MIN.
5. PCB RETENTION PRE-SOLDER : 1 LB MIN.
6. PCB RETENTION POST-SOLDER: 10 LBS MIN.
7. LED COLOR : GREEN

ENVIRONMENTAL:
1. STORAGE : -40°C TO +85°C.
2. OPERATION: 0°C TO 70°C.

MATES WITH MODULAR PLUG CONFORMING TO FCC PART 68, SUBPART F.

W/ TIN NUMBER: E5J88-XXLXFX

A-LED1:GREEN, LED2:GREEN
B-LED1:GREEN, LED2:ORANGE
C-LED1:GREEN, LED2:YELLOW
L-LED1:YELLOW, LED2:GREEN
2 D-LED1:G+R, LED2:G+R
5 F-LED1:ORANGE, LED2:GREEN

1- 3u", 2- 6u", 3-15u"
4-30u" 5-50u"

0- W/O "FRE" LOGO
2- W/ "FRE" LOGO
6 3- W/ "FRE" LOGO A05-0130

1- NO TAB 4
4- TOP TABS & SIDE TABS

REVISION RECORD

REV	ECO	DESCRIPTION	DRFT	CHKD
1		DRAWING MODIFY	IRONDR 11/28/'02	
2		ADD NEW P/N	Jake 08/07/'03	
3		DRAWING MODIFY	Jake 08/23/'03	
4		ADD NEW P/N	Jake 10/22/'03	
5		DRAWING MODIFY	PETERS 10/28/'04	
6		ADD NEW P/N	PETERS 02/28/'05	
7		ERASE P/N	YANGLAN 05/26/'05	

MM (INCH)	DFTO LUSHENG	DATE 12/13/'01	FULL RISE ELECTRONIC CO., LTD
TOLERANCES EXCEPT AS NOTED	CHKD JAKE	DATE 2005/5/26	
MM .0 ±0.20 ± .00 ±0.15 ± .000 ±0.075 ±	MFO	DATE	TITLE RJ45(LED) STACKED GANGED JACK, 2X1
	APPV LUSHENG	DATE 2005/5/26	
	MATERIAL :		
ANGLES ±	QT'Y :		DRAWING NO. GE5J3021 / PART NO. SEE NOTE
	FINISH :		SIZE A3 REV 7 05/26/'05
THIRD ANGLE PROJECTION	SCALE : 5:3		DO NOT SCALE DRAWING SHEET 1 OF 1

DETACHED LISTS