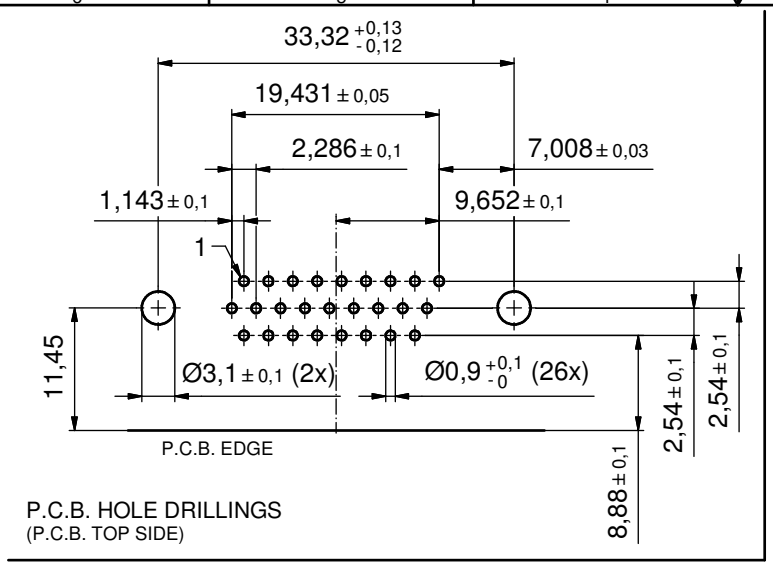

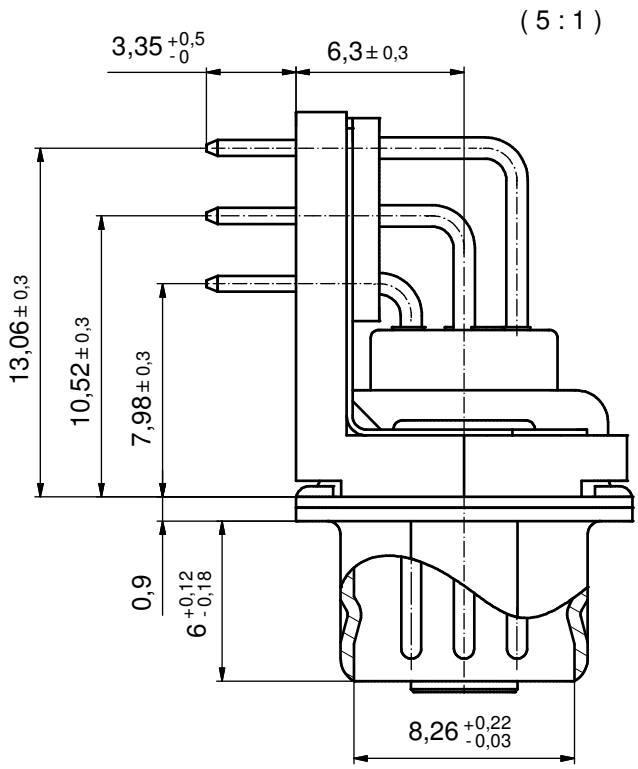

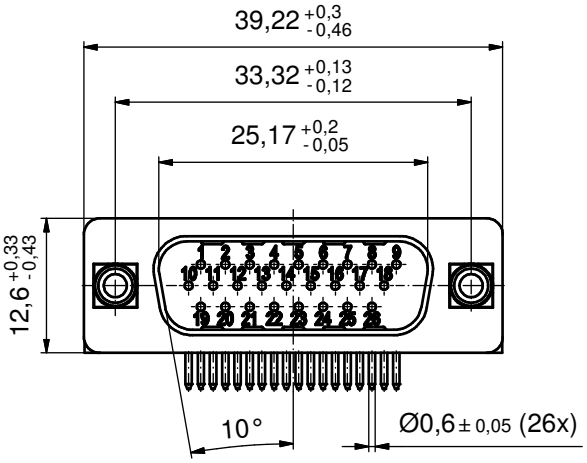

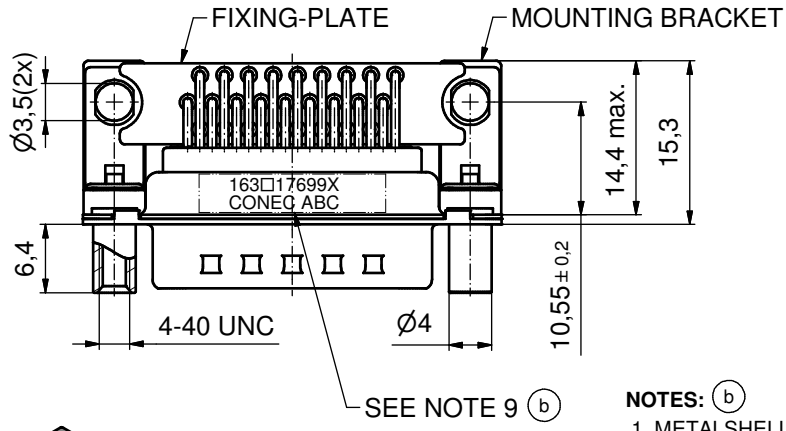

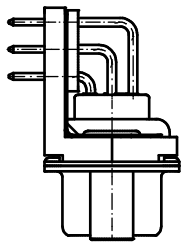

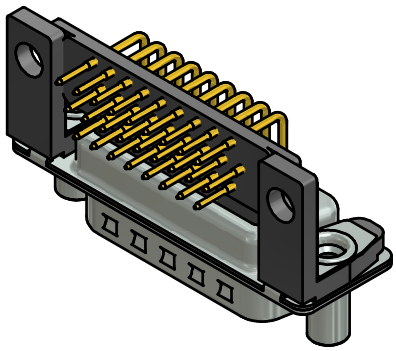

NOTES: (b)

1. METALSHELLS: STEEL; min. 315µin TIN over 40-80µin NICKEL
2. INSULATORS: PBT GF UL 94 V-0, BLACK
3. CONTACTS: COPPER ALLOY; PLATING (SEE PART NO.):
   - □ PLEASE ADD A for GOLD FLASH over NICKEL (PREFERRED TYPE)
   - □ PLEASE ADD B for 20µin HARD GOLD over min. 50µin NICKEL
   - □ PLEASE ADD C for 30µin HARD GOLD over min. 50µin NICKEL
4. MOUNTING-BRACKETS: PBT GF UL 94 V-0; BLACK
5. THREADED LOCKS: COPPER ALLOY; min. 200µin TIN over 80µin NICKEL
6. FIXING-PLATE: PBT GF UL 94 V-0, BLACK
7. GROUNDING BRACKETS: COPPER ALLOY
8. MAXIMUM TORQUE VALUE FOR THREAD: 6 in.LB
9. CONNECTOR IS PART MARKED: 163□17699X CONEC ABC (see note 3)

RoHS compliant

THIS DRAWING MAY NOT BE COPIED OR REPRODUCED IN ANY WAY, AND MAY NOT BE PASSED ON TO A THIRD PARTY WITHOUT WRITTEN PERMISSION. OWNERSHIP AND COPYRIGHT OF CONEC GmbH

DO NOT ALTER CAD DRAWING BY HAND

rev.	description	date	name
4 x b	Ä5481	07.01.2015	K.H.
a	Original		

tolerance — dim. in mm

	date	name
drawn	07.01.15	Henneboel
appd.	07.01.15	Lehmenkühler
norm		
d-old	16K1A207A/16V1IH5B	

CONEC®

scale: 2:1 (5:1)
material: SEE NOTES

title:
D-SUB HD MALE 90°
26pos. Solder Pin angled 0,350inch
threaded insert, mounting and grounding bracket

dwg no: (b) 16K1A3568
DIN-A3
sh: 1

part no: (b) 163□17699X (see note 3)