ITEM	CONNECTOR PART NO.	DESCRIPTION	IPI CHECK	EOR CHECK
1	See Table 1	DS CONNECTOR		
2	See Table 1	KR CONNECTOR		
3	UL1061, 28 AWG	WHITE		

Applicable Tooling

BCD

TABLE 1

ITEM	NUMBER OF CIRCUITS	CONNECTOR PART NO.	ASSEMBLY PART NUMBER	TOTAL WIRE REQUIRED
1	2	02DS-8E	A02KR02DS28W152B	304.8
2		02KR-8M-P		
1	3	03DS-8E	A03KR03DS28W152B	457.2
2		03KR-8M-P		
1	4	04DS-8E	A04KR04DS28W152B	609.6
2		04KR-8M-P		
1	5	05DS-8E	A05KR05DS28W152B	762
2		05KR-8M-P		
1	6	06DS-8E	A06KR06DS28W152B	914.4
2		06KR-8M-P		
1	7	07DS-8E	A07KR07DS28W152B	1066.8
2		07KR-8M-P		
1	8	08DS-8E	A08KR08DS28W152B	1219.2
2		08KR-8M-P		
1	9	09DS-8E	A09KR09DS28W152B	1371.6
2		09KR-8M-P		
1	10	10DS-8E	A10KR10DS28W152B	1524
2		10KR-8M-P		
1	11	11DS-8E	A11KR11DS28W152B	1676.4
2		11KR-8M-P		
1	12	12DS-8E	A12KR12DS28W152B	1828.8
2		12KR-8M-P		
1	13	13DS-8E	A13KR13DS28W152B	1981.2
2		13KR-8M-P		
1	14	14DS-8E	A14KR14DS28W152B	2133.6
2		14KR-8M-P		
1	15	15DS-8E	A15KR15DS28W152B	2286
2		15KR-8M-P		

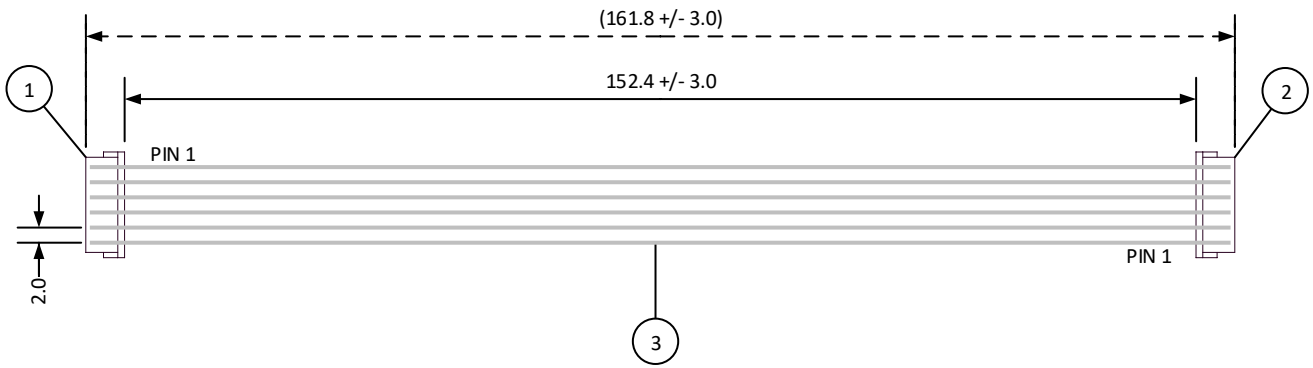

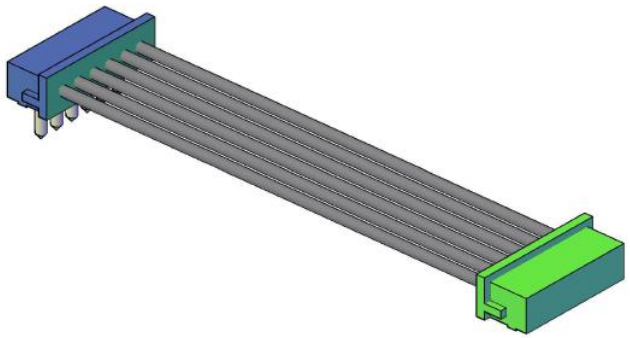

REV.	DESCRIPTION	DATE	BY

SCALE: 1: 1

DIMENSIONS: All dimensions are in MM with a tolerance of +/- 3.0 unless otherwise specified.

DRAWN BY: STEVEN PILKINGTON

CHECKED BY: JUSTIN BAKER

CUSTOMER NAME:

CUSTOMER PART NO.:

DESCRIPTION: 2.0 mm Pitch DS to KR Standard Catalog Assembly - 6" Overall Length – Pin out: 1 to N

ASSEMBLY PART NO.: SEE TABLE 1

DRAWING NO. & REVISION: GAM-032

REVISED: 3/4/2016