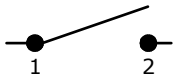

CIRCUIT: SPST ▲

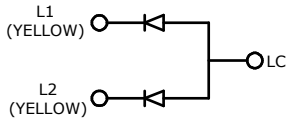

LED SCHEMATIC ▲

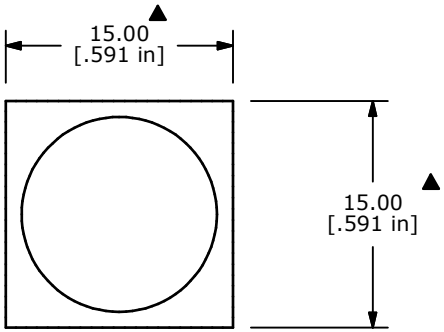

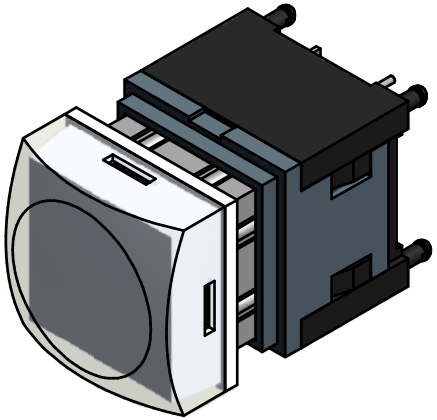

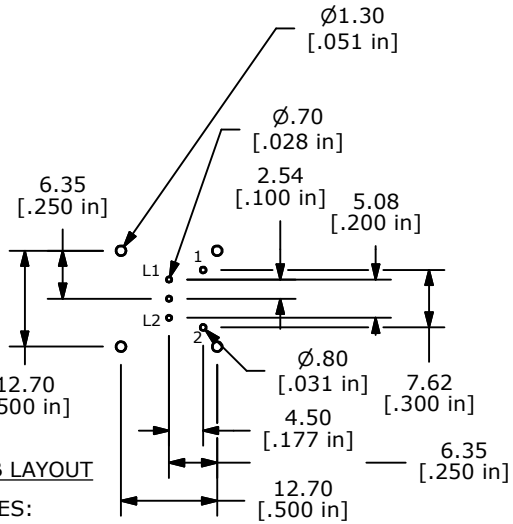

PCB LAYOUT

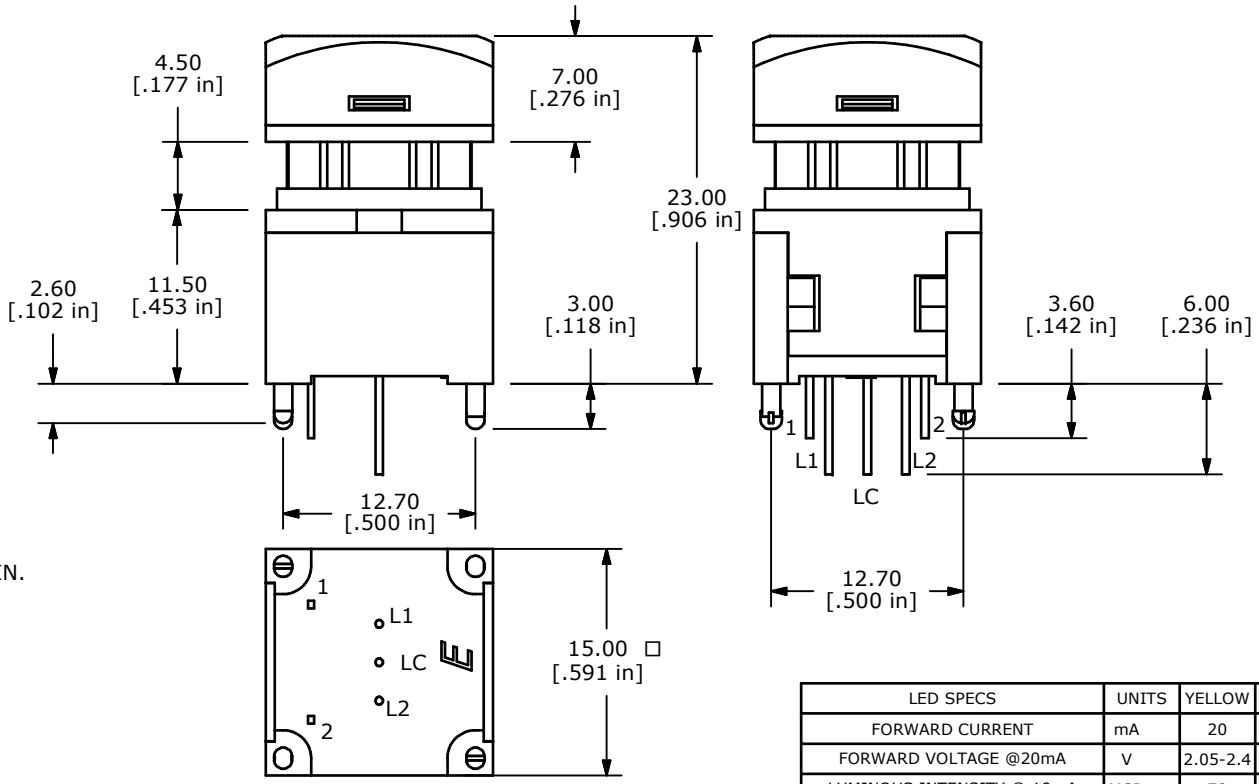

NOTES:
1. ALL DIMENSIONS IN MM [INCH]
2. GENERAL TOLERANCE: X.X=± 0.4
   X.XX=± 0.25
3. TERM. NOS. FOR REFERENCE ONLY.
4. RATING: 12VDC, 100mA
5. CONTACT MATERIAL: GOLD PLATED (C)
6. CONTACT RESISTANCE: 200 MILLI-OHM MAX.
7. INSULATION RESISTANCE: 500VDC, 100 MEGA-OHM MIN.
8. OPERATING FORCE: 250± 100GF
9. MECHANCIAL LIFE: 1,000,000 CYCLES
10. OPERATING TEMP: -20˚C TO +70˚C
▲11. LED COLORS: YELLOW - YELLOW
12. TRAVEL: 4.50mm±0.20
13. 2002/95/EC (ROHS) COMPLIANT
14. ▲ DENOTES CRITICAL PARAMETER.
▲15. SWITCH HAS TACTILE FEEDBACK WHEN ACTUATED.

LED SPECS	UNITS	YELLOW	YELLOW
FORWARD CURRENT	mA	20	20
FORWARD VOLTAGE @20mA	V	2.05-2.4	2.05-2.4
LUMINOUS INTENSITY @ 10mA	MCD	70	70

REV	PCR NO	DESCRIPTION	DATE	BY
C	21454	CHANGE CONTACT MATERIAL TO GOLD	5/13/14	EBP
B	19357	UPDATE HOUSING, COVER, PLUNGER	11/08/10	BMA
A	18361	RELEASE FOR PRODUCTION	12/22/08	BLR

THE INFORMATION CONTAINED IN THIS DOCUMENT IS PROPRIETARY TO E-SWITCH AND IS NOT TO BE COPIED OR TRANSFERRED

E-SWITCH | LAMB INDUSTRIES

TITLE LP11OA1TBSYY

SCALE	DATE	DR	DWG	REV
2=1	12/22/2008	BLR	B231007	C