## LOADING PATTERN MATING SIDE

| POS | 01 | 02 | 03 | 04 | 05 | 06 | 07 | 08 | 09 | 10 | 11 | 12 | 13 | 14 | 15 | 16 | 17 | 18 | 19 | 20 | 21 |
|---|---|---|---|---|---|---|---|---|---|---|---|---|---|---|---|---|---|---|---|---|---|
| f | 6 | 6 | 6 | 6 | 6 | 6 | 6 | 6 | 6 | | | | | 6 | 6 | 6 | 6 | 6 | 6 | 6 | 6 |
| e | 5 | 5 | 5 | 5 | 5 | 5 | 5 | 5 | 5 | 5 | 5 | 5 | 5 | 5 | 5 | 5 | 5 | 5 | 5 | 5 | 5 |
| d | 5 | 5 | 5 | 5 | 5 | 5 | 5 | 5 | 5 | 5 | 5 | 5 | 5 | 5 | 5 | 5 | 5 | 5 | 5 | 4 | 4 |
| c | 5 | 5 | 5 | 5 | 5 | 5 | 5 | 5 | 5 | 5 | 5 | 5 | 5 | 5 | 5 | 5 | 5 | 5 | 5 | 5 | 5 |
| b | 5 | 5 | 5 | 5 | 5 | 5 | 5 | 5 | 5 | 5 | 5 | 5 | 5 | 5 | 5 | 5 | 5 | 5 | 5 | 5 | 5 |
| a | 5 | 5 | 5 | 5 | 5 | 5 | 5 | 5 | 5 | 5 | 5 | 5 | 5 | 5 | 5 | 5 | 5 | 5 | 5 | 5 | 5 |
| z | 0 | 0 | 0 | 0 | 0 | 0 | 0 | 0 | 0 | | | | | 0 | 0 | 0 | 0 | 0 | 0 | 0 | 0 |

## LOADED CONNECTOR ASSEMBLY
(FOR EXAMPLE)

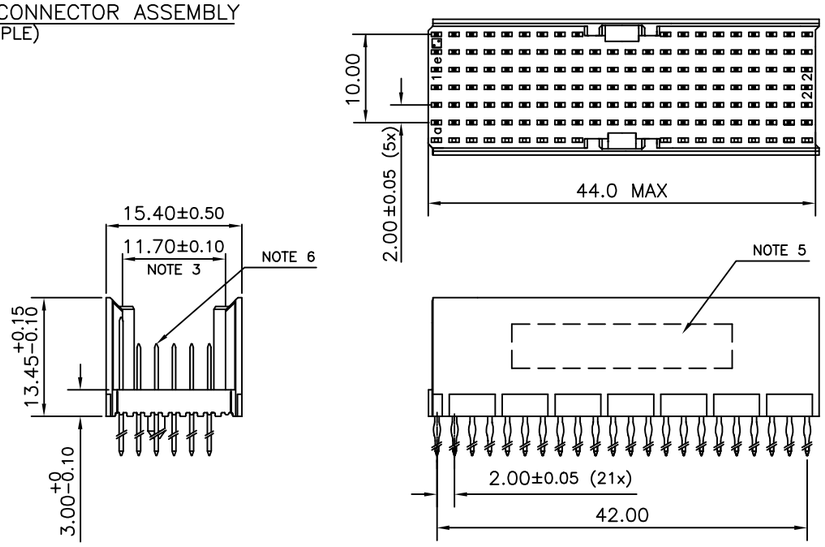


## CONTACT OVERVIEW

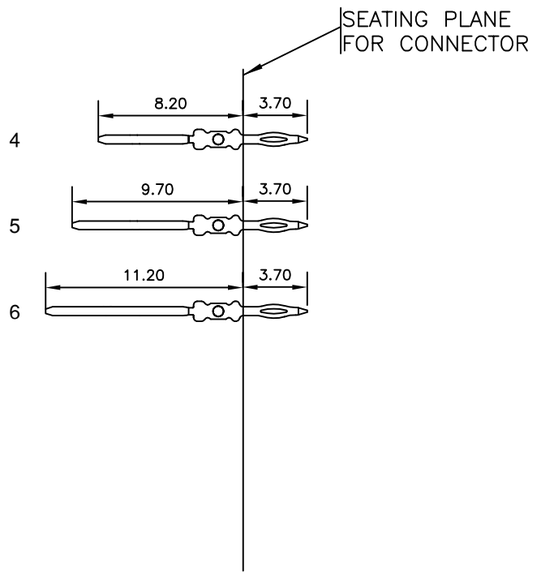


## LAY-OUT P.C.B.-HOLE

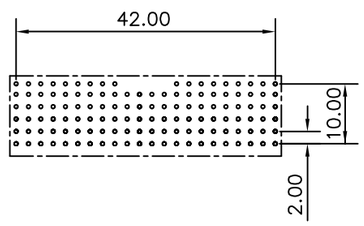


HM2P66PDJ3F5-- -

LEAD FREE INDICATOR : LF = LEAD FREE
(DIGIT 15 & 16)

PLATING CODE (DIGIT 13 AND 14)
(REF DRW NO. BS,C , 201844 , 003)

## NOTES

1. THIS PRODUCT IS CSA APPROVED.
2. THIS PRODUCT IS UL RECOGNIZED.
3. MEASURED AT THE BOTTOM.
4. MATERIAL CONTACT: PHOSPHORBRONZE
   HOUSING: CREAM WHITE GLASS FILLED POLYESTER UL-94V0
5. CONNECTOR PRINTED WITH P/N AND DATE CODE.
6. FOR ACTUAL CONTACT LOADINGS, SEE LOADING PATTERN MATING SIDE.
7. SHAPE OF CONNECTOR HOUSING CAN ALTER DEPENDING ON PRODUCTION LOCATION
8. THE PRODUCT (LF) MEETS EUROPEAN UNION DIRECTIVES AND OTHER COUNTRY REGULATIONS AS DESCRIBED IN GS-22-008
9. FOR RECOMMENDED PTH DIMENSIONS REFER DRAWING : BS, A , 201572 , 001

CATALOG NO: HM2P66PDJ3F5----

| | | | | | | | |
|---|---|---|---|---|---|---|---|
| mat'l. code SEE NOTE 4 | | | | surface ISO 1302 | tolerance ISO 406 ISO 1101 | projection | product family MILLIPACS |
| ltr | ecn no | dr | date | tolerances unless otherwise specified | | | title |
| A | I07-0003 | MINI | 2007-01-04 | angles 0°±1° | linear .0±0.2 / .00±0.1 | MM | MPACS 5+2R STR HDR PF CONN TYPE AB 22 POS. |
| | | | | | | scale – | |
| | | | | dr | MINI K VANDANATH | 2007-01-04 | dwg no BS, C ,203028, 742 — sheet 1 of 1 — size A3 |
| | | | | engr | BIJU K PAUL | 2007-01-04 | |
| | | | | chr | BIJU K PAUL | 2007-01-04 | |
| | | | | appd | BIJU K PAUL | 2007-01-04 | type Product Customer Drawing |
| sheet index | revision | A | | | | | |
| | sheet | 1 | | | | | |

FCIconnect.com
Copyright FCI
form: A3