THIS DRAWING IS UNPUBLISHED. RELEASED FOR PUBLICATION - . -
© COPYRIGHT By, - ALL RIGHTS RESERVED.

LOC	DIST
CM	00

REVISIONS

P	LTR	DESCRIPTION	DATE	DWN	APVD
	E	REVISED PER ECO-11-015326	18OCT11	KH	SM

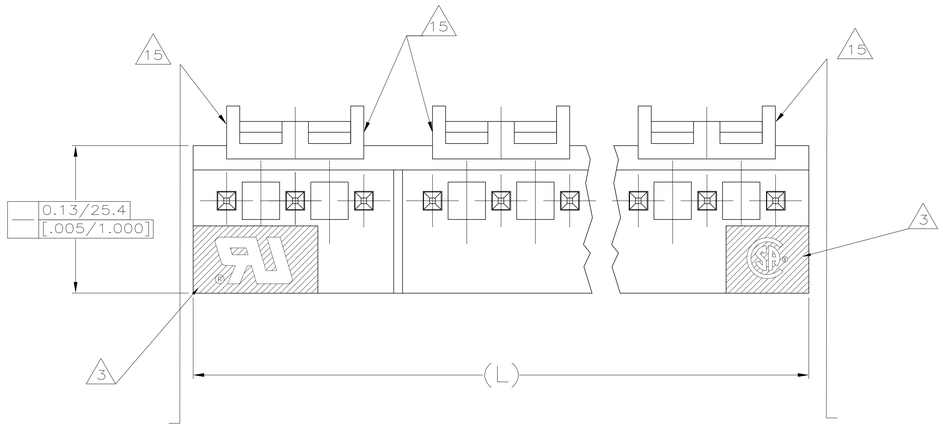

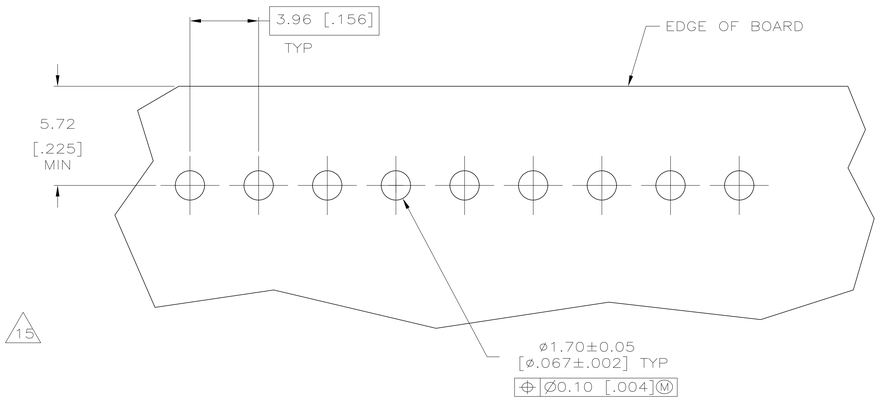

10 RECOMMENDED MOUNTING HOLE PATTERN FOR 1.57 [.062] THICK P.C. BOARD

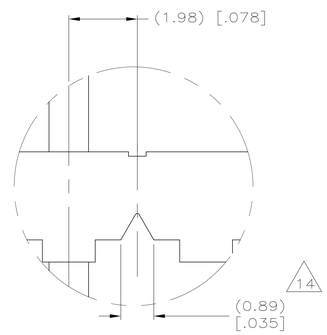

DETAIL C

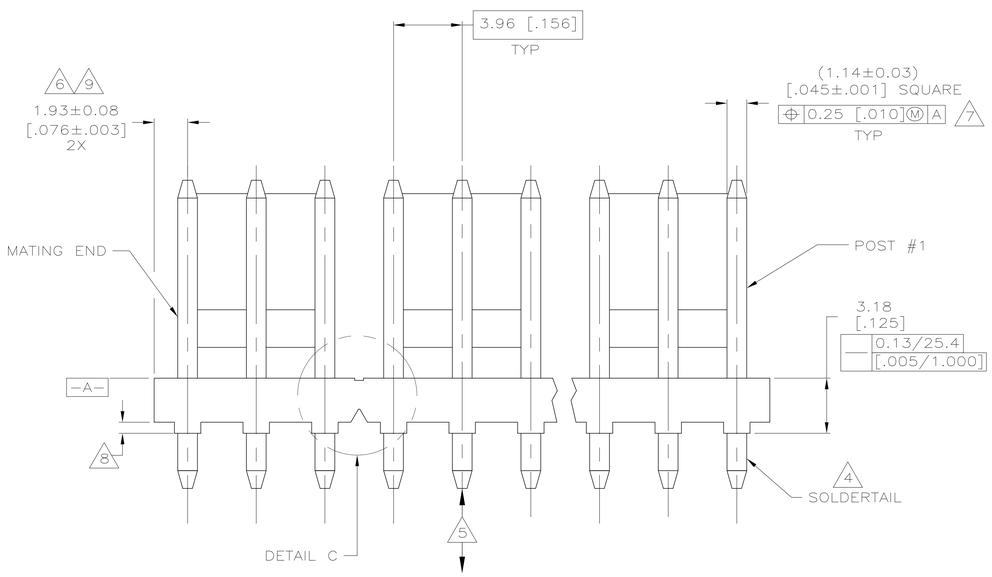

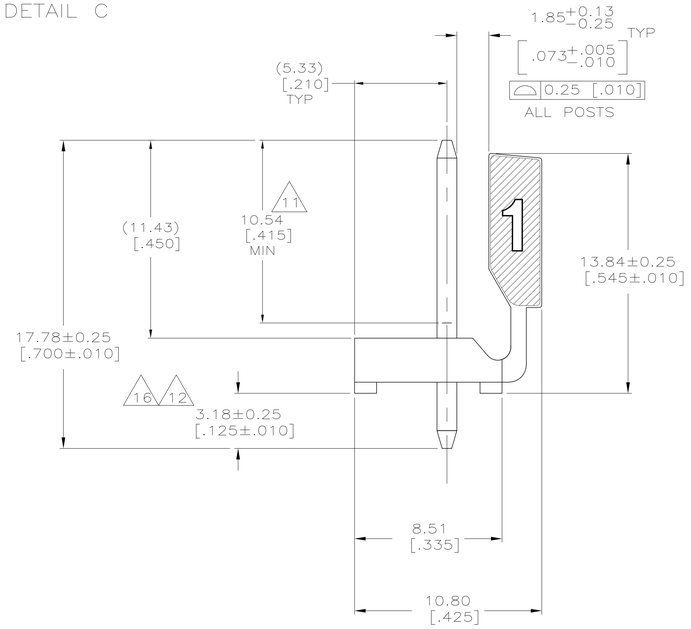

1 MATERIAL
HOUSING: THERMOPLASTIC POLYESTER, GLASS FILLED, UL94V-0
POST: COPPER ALLOY

2 FINISH
HOUSING: NATURAL
POST: SEE NOTES 11, 12, & 16 FOR PLATING.

3 UL MARKING MAY NOT APPEAR ON THE 2 OR 3 POSITION SIZES. CSA MARKING MAY NOT APPEAR ON THE 2 POSITION SIZE.

4 POST SOLDERTAILS COMPLY WITH TYCO SOLDERABILITY SPECIFICATION 109-11-2.

5 POST WITHSTANDS 13.34 NEWTONS (3 LBS) MINIMUM AXIAL FORCE IN EITHER DIRECTION WITHOUT DISLODGING.

6 APPLIES AT -A-

7 APPLIES WHEN THE HEADER IS STRAIGHT.

8 PLASTIC PROJECTIONS PERMITTED IN THIS ZONE.

9 COORDINATE DIMENSIONS APPLIES FROM CENTER OF THE ACTUAL FEATURE.

10 SOLDER SIDE OF BOARD IS SHOWN.

11 PLATING: GOLD PLATE AREA, 0.00076 [.000030] GOLD OR 0.00008 [.000003] MIN GOLD FLASH OVER 0.00068 [.000027] PALLADIUM NICKEL, PER TE CONNECTIVITY'S DISCRETION, ALL SIDES, OVER NICKEL UNDERPLATE, 0.00127 [.000050] MIN, ALL SIDES AND ENTIRE LENGTH OF POST.

12 PLATING: BRIGHT TIN-LEAD (93/7) PLATE AREA, 0.00381-0.00889 [.000150-.000350] THICK, ALL FOUR SIDES, 3.18 [.125] MINIMUM.

13. DIMENSIONS IN BRACKETS ARE IN INCHES.

14 ALL POSITION SIZES HAVE THE BACK WALL NOTCHED ON BOTH ENDS AS SHOWN. THE 2 THRU 5 POSITION SIZES HAVE SOLID BACK WALLS. POSITION SIZES 6 AND ABOVE HAVE AN INTERRUPTED BACK WALLS AT VARIOUS LOCATIONS (SEE TABLE FOR INTERRUPTION(S) LOCATIONS).

15 EDGE OF POLARIZING LOCK WALL TO BE IN LINE WITH CENTERLINE OF ADJACENT POST WITHIN ±0.13 [.005].

16 PLATING: MATTE TIN PLATE AREA, 0.00381-0.00889 [.000150-.000350] THICK, ALL FOUR SIDES, 3.18 [.125] MINIMUM.

17 OBSOLETE PARTS: OBSOLETE CIS STREAMLINING PER D.RENAUD/D.SINISI

BACK WALL INTERRUPTIONS BETWEEN POSTS	(L)	NO.OF POSN	ASSEMBLY
4&5 7&8 11&12 14&15	71.20 [2.803]	18	4-644627-8
4&5 7&8 10&11 13&14	67.23 [2.647]	17	4-644627-7
4&5 8&9 12&13	63.27 [2.491]	16	4-644627-6
4&5 8&9 11&12	59.31 [2.335]	15	4-644627-5
4&5 7&8 10&11	55.35 [2.179]	14	4-644627-4
4&5 7&8 10&11	51.38 [2.023]	13	4-644627-3
4&5 8&9	47.42 [1.867]	12	4-644627-2
4&5 7&8	43.46 [1.711]	11	4-644627-1
3&4 7&8	39.50 [1.555]	10	4-644627-0
3&4 6&7	35.53 [1.399]	9	3-644627-9
4&5	31.57 [1.243]	8	3-644627-8
4&5	27.61 [1.087]	7	3-644627-7
3&4	23.65 [.931]	6	3-644627-6
NONE	19.69 [.775]	5	3-644627-5
NONE	15.72 [.619]	4	3-644627-4
NONE	11.76 [.463]	3	3-644627-3
NONE	7.80 [.307]	2	3-644627-2
SUPERSEDED 17			
4&5 7&8 11&12 14&15	71.20 [2.803]	18	~~1-644627-8~~
4&5 7&8 10&11 13&14	67.23 [2.647]	17	~~1-644627-7~~
4&5 8&9 12&13	63.27 [2.491]	16	~~1-644627-6~~
4&5 8&9 11&12	59.31 [2.335]	15	~~1-644627-5~~
4&5 7&8 10&11	55.35 [2.179]	14	~~1-644627-4~~
4&5 7&8 10&11	51.38 [2.023]	13	~~1-644627-3~~
4&5 8&9	47.42 [1.867]	12	~~1-644627-2~~
4&5 7&8	43.46 [1.711]	11	~~1-644627-1~~
3&4 7&8	39.50 [1.555]	10	~~1-644627-0~~
3&4 6&7	35.53 [1.399]	9	~~644627-9~~
4&5	31.57 [1.243]	8	~~644627-8~~
4&5	27.61 [1.087]	7	~~644627-7~~
3&4	23.65 [.931]	6	~~644627-6~~
NONE	19.69 [.775]	5	~~644627-5~~
NONE	15.72 [.619]	4	~~644627-4~~
NONE	11.76 [.463]	3	~~644627-3~~
NONE	7.80 [.307]	2	~~644627-2~~

METRIC

THIS DRAWING IS A CONTROLLED DOCUMENT.
DIMENSIONS: mm [INCHES]
TOLERANCES UNLESS OTHERWISE SPECIFIED: 0 PLC ±, 1 PLC ±, 2 PLC ±0.13 [.005], 3 PLC ±, 4 PLC ±, ANGLES ±
MATERIAL 1 FINISH 2

DWN S. HOOVER 25-FEB-2005
CHK D. BOSSI 25-FEB-2005
APVD D. BOSSI 25-FEB-2005
PRODUCT SPEC
APPLICATION SPEC
WEIGHT
CUSTOMER DRAWING

TE Connectivity

NAME MTA-.156 HEADER ASSEMBLY, STRAIGHT, .045 SQUARE POST, .000030 GOLD PLATED, WITHOUT RETENTION PEGS

SIZE A0 | CAGE CODE 00779 | DRAWING NO C-644627 | RESTRICTED TO —
SCALE 1:1 | SHEET 1 OF 1 | REV E

4809 (3/11)