DRAWING MADE IN KOREAN PROJECTION

DIMENSIONS IN INCHS . MM

CUSTOMER DRAWING

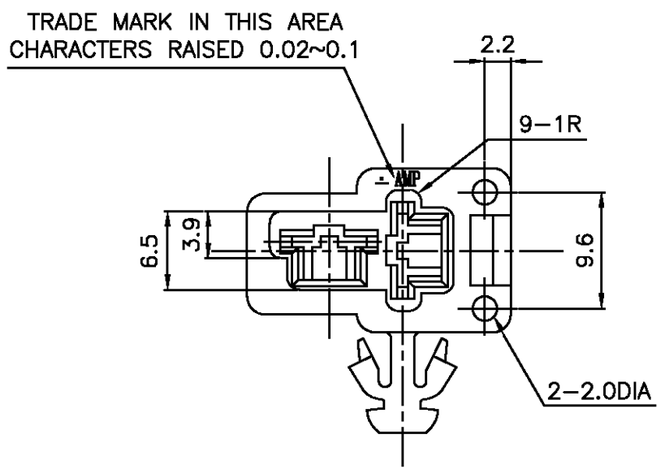

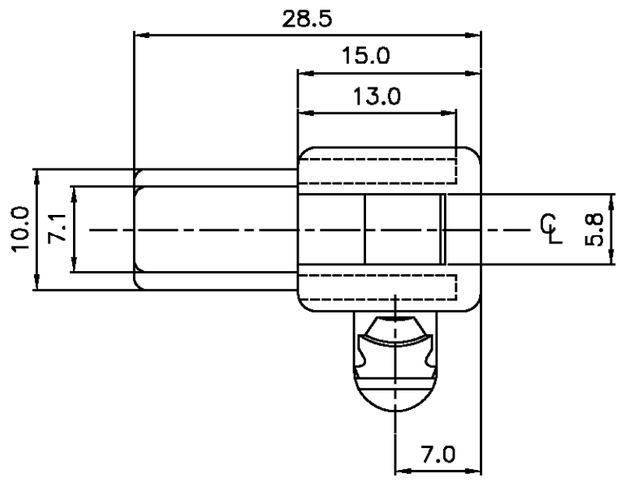

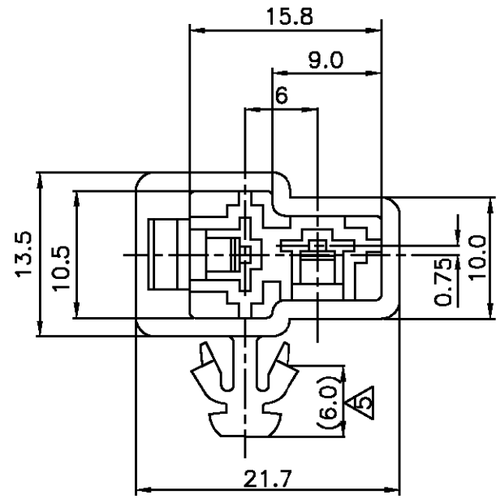

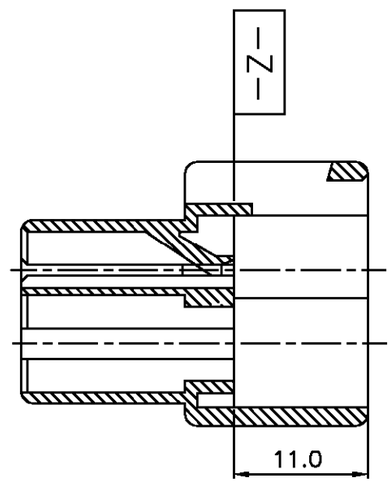

NOTE

1. TO BE MEASURED BETWEEN [– Z –] AND 2mm.
2. TO BE MATE WITH REC HSG SMOOTHLY.
3. TO BE MATE WITH PLATE(176994) SMOOTHLY
4. (A) APPLICABLE PANEL : DIAMETER – ø7.0 mm
   THICKNESS – 0.65~1.2 mm
5. (A) A SPACE REQUIRED INSIDE OF THE PANEL FOR PROPER INSTALLATION.
6. APPLIED CONTACT P/N : 170340,170341,170349
7. APPLIED REC HSG P/N : 172130

NATURAL	368021-1
COLOR	PART NO.

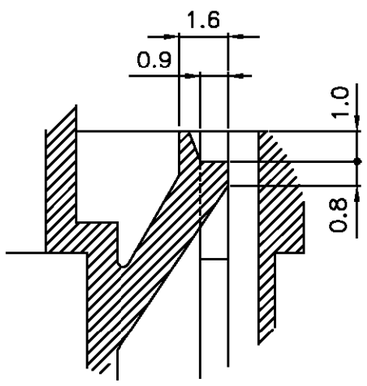

DETAIL LANCE
SCALE:5/1

APPLICABLE TAB CONTACT			
WIRE RANGE		TML P/N	CURRENT (A)
AWG	mm²		
20–14	0.5–2.27	170340	10
14–12	2–3.37	170341	20
22–20	0.3–0.5	170349	5

LTR	REVISION RECORD	DR	CHK	DATE
A	REVISED(RD97–0157)	YJ	JK	JUL.29 '97
0	RELEASED	YM	JK	11/10 '95

© 19 AMP KOREA
ALL RIGHT RESERVED AMP PRODUCTS COVERED BY PATENTS AND OR PATENTS PENDING

AMP KOREA

WIRE RANGE	INSULATION DIA	NAME	
MATERIAL: NYLON 66	FINISH/COLOR: SEE TABLE	250 2P CAP CLIP HSG. (PANEL MOUNT TYPE)	
DR	APP	TOLERANCES: 0<XX<10 ±0.2; 10<XX<30 ±0.25; 30<XX<100±0.3; ANGLES ±3°	SIZE A3 / LOC DS / NUMBER 368021
CHK	REL		SCALE 2/1 / REV A / SHEET 1/1

PRINT DIST.