38HM43

SPECIFICATION DETAILS:				
STANDARD:	13			
CONSTRUCTION:				
ENCLOSURE DESIGN	HERMETIC SEAL			
CONTACT MATERIAL & CONFIGURATION	SILVER			
CIRCUIT CONFIGURATION	SEE CIRCUIT DIAGRAM			
TERMINATION	SEE DRAWING			
WEIGHT				
EXPOSED METALS	CORROSION RESISTANT STAINLESS STEEL			
ELECTRICAL CHARACTERISTICS:				
CONTACT ARRANGEMENT	S.P.N.C.			
ELECTRICAL RATINGS	LOAD	SEA LEVEL 28 VDC	SEA LEVEL 115 VAC, 400 CPS	70,000 FT 28 VDC
-SEA LEVEL	RESISTIVE	4 AMP	2 AMP	4 AMP
-70,000 FEET	INDUCTIVE	2 AMP	2 AMP	2 AMP
	LAMP	1 AMP	.5 AMP	1 AMP
DIELECTRIC STRENGTH & INSULATION RES (BASIC SWITCH)	DIELECTRIC STRENGTH (≈ 60 Hz FOR 5 SECONDS)		INSULATION RESISTANCE (500 VDC ±10%)	
-BETWEEN TERMINALS AND EXPOSED NON-CURRENT CARRYING METAL	1000 V Rms, 500 μ A (MAX LEAKAGE)		1000 Megohm MIN	
-BETWEEN TERMINALS OF MUTUALLY INSULATED CIRCUITS	1000 V Rms, 500 μ A (MAX LEAKAGE)		1000 Megohm MIN	
-BETWEEN ALL UNCONNECTED TERMINALS OF THE SAME POLE	1000 V Rms, 500 μ A (MAX LEAKAGE)		1000 Megohm MIN	
SWITCH RESISTANCE	N/A			
RECOMMENDATION OR USE IN APPL LESS THAN .5 amps AND/OR 12 volts	N/A 14			
MECHANICAL CHARACTERISTICS:				
OPERATING FORCE	9 OZ MAX			
RELEASE FORCE	2 OZ MIN			
DIFFERENTIAL TRAVEL	.030 MAX			
OVERTRAVEL	.030 MIN			
MOUNTING STRENGTH	N/A			
LIFE:	13			
MECHENICAL LIFE	25,000 MIN			
ELECTRICAL LIFE AT FULL RATED LOAD	25,000 MIN			
ENVIRONMENTAL:				
TEMPERATURE RANGE	-65°F TO +250°F			
ALTITUDE RANGE	SEA LEVEL TO 70,000 FT			
SHOCK 13	PER MIL-S-8805 SYMBOL M-100g			
VIBRATION 13	PER MIL-S-8805 SYMBOL 2 - 10-2000 Hz & 15g PEAK			
MOISTURE RESISTANCE 13	PER MIL-S-8805			
THERMAL SHOCK 13	PER MIL-S-8805			
SALT SPRAY 13	PER MIL-S-8805			

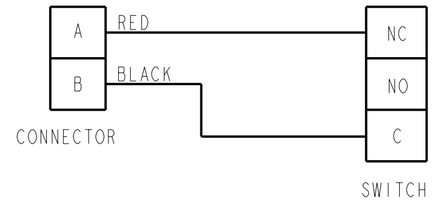

CIRCUIT DIAGRAM

NOTES

1 - UNIT INCLUDES 2HM SERIES TYPE BASIC SWITCH WITH ACTUATOR ASSEMBLED

2 ADJUSTMENT CAUTION: DO NOT ALLOW ACTUATOR LEAF TO COME IN CONTACT WITH FIXED END OF HM LEVER, SEAL DAMAGE MAY OCCUR

3 LEAF ACTUATOR ADJUSTED TO MEET SPECIFIED OPERATING POSITION PRIOR TO DELIVERY. DISASSEMBLY AND SUBSEQUENT REASSEMBLY MAY ALTER THIS CONDITION

4 2X NO. 18 WIRE LEAD PER MIL-W-22759/11 (RED N.C., BLACK COM.)

5 2X CORROSION RESISTANT STEEL LOCKWASHER

6 2X 2-56 UNC X .500 CORROSION RESISTANT STEEL ROUND HEAD MACHINE SCREW

7 2X 2-56 UNC CORROSION RESISTANT STEEL HEX NUT

8 Ø.19 X .12 WIDE CORROSION RESISTANT STEEL ROLLER (CONCENTRICITY .005 FIM)

9 HOLES THROUGH ACTUATOR WILL SIMULTANEOUS ACCEPT Ø.087 MIN PINS ON .375±.002 CENTERS

10 - INSULATION RESISTANCE BETWEEN EITHER PIN AND CONNECTOR SHELL MUST BE 100 MEGOHMS MIN AT 500 VDC

11 2X HEAT SHRINK TUBING PER M23053/12-312-C OR EQUIVALENT

12 HEAT SHRINK TUBING PER M23053/12-325-C OR EQUIVALENT

13 BASIC SWITCH IS CATEGORY II DEVICE PER MIL-S-8805/8

14 CONTACT HONEYWELL/MICRO SWITCH IF ADDITIONAL INFORMATION ON LOW ENERGY LOADS IS REQUIRED OR FOR HELP WITH SPECIFIC APPLICATIONS

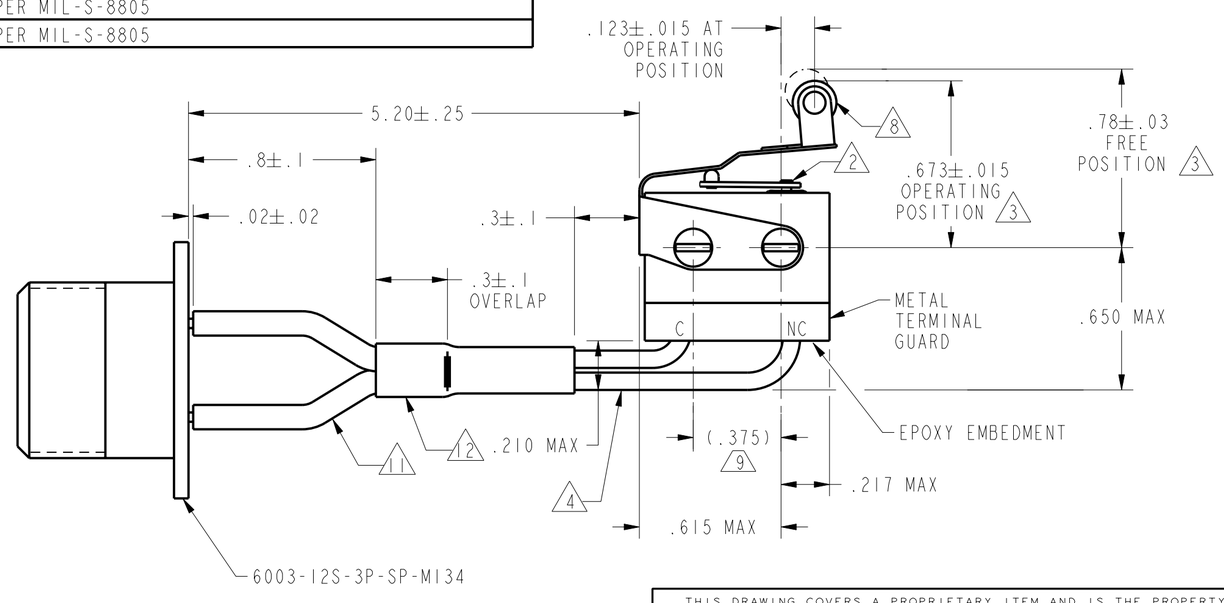

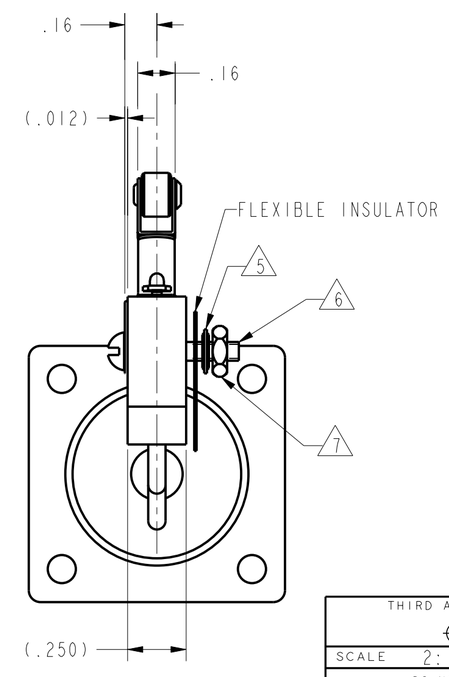

THIRD ANGLE PROJECTION

SCALE 2:1

DO NOT SCALE PRINT

UNLESS OTHERWISE SPECIFIED TOLERANCES ARE

ONE PLACE	(.0)	±.030
TWO PLACES	(.00)	±.015
THREE PLACES	(.000)	±.005
ANGLES		±

WEIGHT

THIS DRAWING COVERS A PROPRIETARY ITEM AND IS THE PROPERTY OF MICRO SWITCH. A DIVISION OF HONEYWELL. THIS DRAWING IS NOT TO BE COPIED OR USED WITHOUT THE APPROVAL OF MICRO SWITCH.

MICRO SWITCH a Honeywell Division

FED. MFG. CODE 91929

SWITCH AND CONNECTOR ASSEMBLY

CATALOG LISTING

38HM43

ANSI Y14.5M-1982 APPLIES

38HM43 | PAGE 1 OF 1 | RELEASE NO. PR-22237 | REPLACES X10058I-HM

DRAWING NUMBER | ISSUE 6

REVISIONS

A	207593	CSL 6 MAR 03

CSL	6 MAR 03	DRAWN
	6 MAR 03	CHECK
SAV	6 MAR 03	CHECK
		CHECK

PTC/CAD 2D